Analog Cameras / DVR

Bullet & Dome Cameras	4
Hidden Analog Cameras	5
Cameras with Accessories	6 - 7
Bullet Cameras	8
DVR	9
Storage / IR / Video / Sound Accessories	10
Power Accessories	11

IP Cameras / NVR

Dome Camera	12 - 13
Bullet Camera	14
PTZ Camera	15
NVR	16
PoE Concept - Standard	17
RS-485 Controller	18
CMS Software / Mobile	18
Table of content	19

PTZ Cameras

PTZ Camera	15
NVR	16
RS-485 Controller	18
CMS Software / Mobile	18
Table of content	19

Analog Bullet / Dome Camera

540 TV Lines Analog IR Camera

- 1/3" Sony / Sharp Color CCD
- 3-Axis Bracket, Hidden Cable Design
- IP66 rating

540 TV Lines Analog IR Camera

CCT005

700 TV Lines Analog Camera IR Vari Focal

- 1/3" Sony / Sharp Color CCD
- OSD/2D-DNR/BLC/MD/Privacy Masking
- 3-Axis Bracket, Hidden Cable Design
- 4-9 mm manual zoom lens
- IP66 rating

700 TV Lines Analog IR Camera Vari Focal

CCT020

700 TV Lines Analog IR Camera Vari Focal

- 1/3" Sony Exview HAD CCD II
- OSD/2D-DNR/BLC/MD/Privacy Masking
- 3-Axis Bracket, Hidden Cable Design
- 4-9 mm manual zoom lens
- IP66 rating

700 TV Lines Analog IR Camera Vari Focal

CCT035

700 TV Lines Analog IR Camera Vari Focal

- 1/3" Sony / Sharp Color CCD
- OSD/2D-DNR/BLC/MD/Privacy Masking
- 3-Axis Bracket, Hidden Cable Design
- 9-22 mm manual zoom lens
- IP66 rating

700 TV Lines Analog IR Camera Vari Focal

CCT040

700 TV Lines Analog Camera Vari Focal

- 1/3" Sony / Sharp Color CCD
- 3-Axis Bracket, Hidden Cable Design
- 4-9 mm manual zoom lens
- Vandal proof - IP66 rating

700 TV Lines Analog IR Camera Vari Focal

CCT010

700 TV Lines Analog IR Camera Vari Focal

- 1/3" Sony / Sharp Color CCD
- 3-Axis Bracket, Hidden Cable Design
- 4-9 mm manual zoom lens
- Vandal proof - IP66 rating

700 TV Lines Analog IR Camera Vari Focal

CCT100

DVR & Analog Cameras Standard Installation

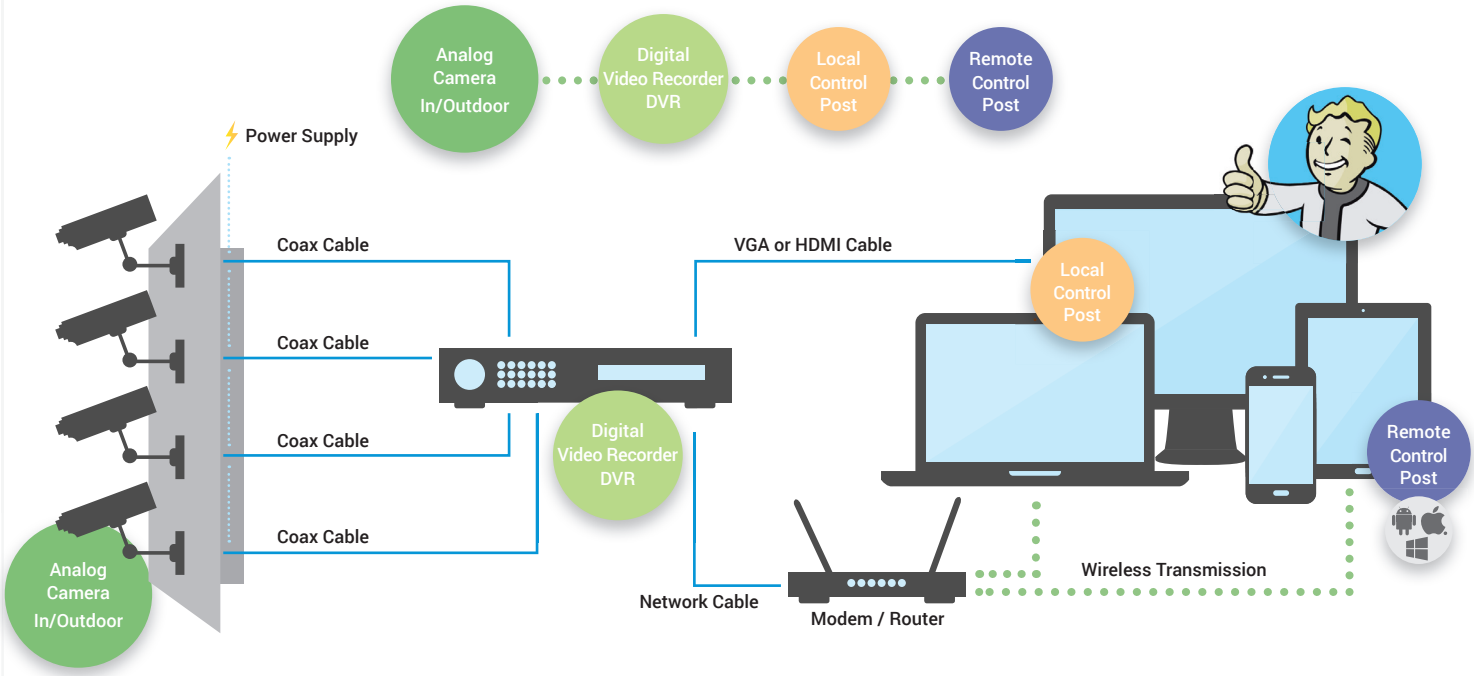

Analog Hidden Camera

540 TV Lines “Smoke Detector” Camera

- 1/3” Sony DSP Effio-E
- 3-Axis Bracket, Hidden Cable Design

540 TV Lines “Smoke Detector” Camera
CCT045

600 TV Lines “PIR Detector” Camera

- 1/3” CCD Sensor
- Pinhole

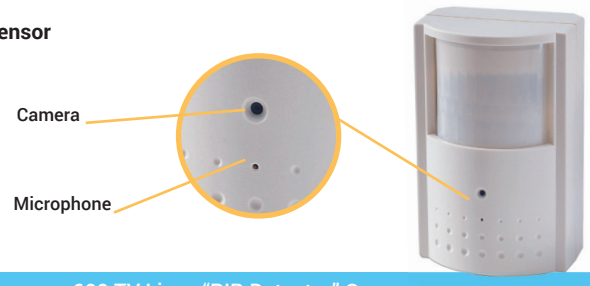

600 TV Lines “PIR Detector” Camera
CCT055

600 TV Lines “Ufo Type” Camera

- 1/3” CCD Sensor

600 TV Lines “Ufo Type” Camera
CCT050

420 TV Lines “Sprinkler Type” Camera

- 1/3” Sony DSP Effio-E
- PInhole

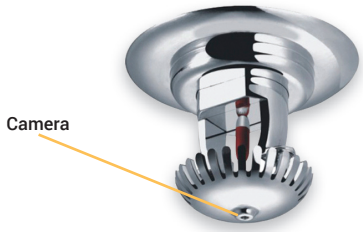

420 TV Lines “Sprinkler Type” Camera
CCT060

420 TV Lines “Pinhole Type” Camera

- 1/3” Sony CCD Sensor
- 35 x 35 x 15 mm

420 TV Lines “Pinhole Type” Camera
CCT070

420 TV Lines Mini Bullet Camera

- 1/3” Sony CCD Sensor
- 32 x 62 mm

420 TV Lines Mini Bullet Camera
CCT065

Analog Cameras With Power/Data Transmission Over Cat.5e/6a Network Cable

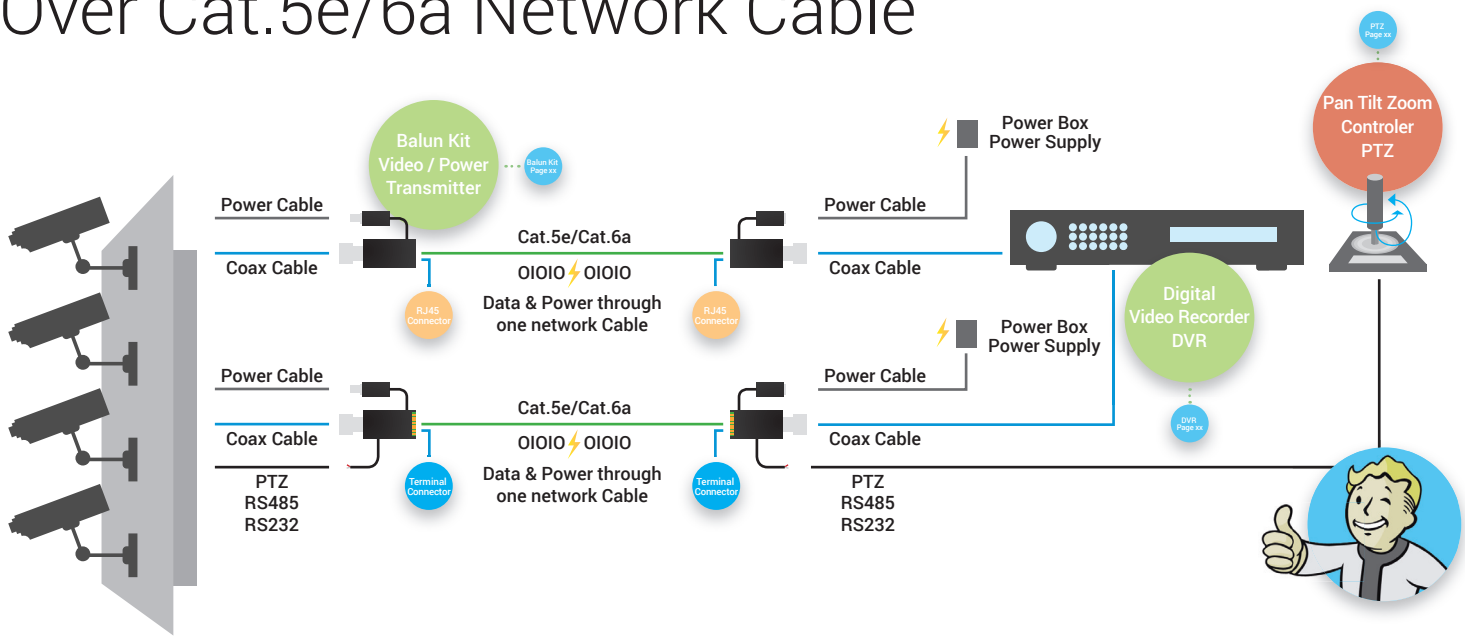

Analog Dome Camera

600 TV Lines Analog IR Camera

- 1/3" Sony CCD
- Vandal proof
- IP66 rating
- DNR
- Smart IR
- Digital wide dynamic range

Accessories

600 TV Lines Analog Dome Camera	Wall Mount	Tilted Wall Mount	Pendant Mount	Wall Mount
HVA2CC5181PVPI	HVO1216ZJ	HVO1240ZJ	HVO1238ZJ	HVO1241ZJ

700 TV Lines Analog IR Camera

- 1/3" Sony EXVIEW HAD CCD II
- 2.8-12mm auto iris lens
- Vandal proof
- Super low illumination
- IP66 rating - 3D DNR - Smart IR
- Digital wide dynamic range
- Electronic image stabilization

Accessories

700 TV Lines Analog Dome Camera	Wall Mount	Tilted Wall Mount	Pendant Mount	Wall Mount
HVA2CC51A5PVPI	HVO1216ZJ	HVO1240ZJ	HVO1238ZJ	HVO1241ZJ

700 TV Lines Analog Camera Vari Focal

- 1/3" Sony EXVIEW HAD CCD II
- 2.8-12mm auto iris lens
- Vandal proof
- Super low illumination
- IP66 rating
- Digital wide dynamic range
- Electronic image stabilization

Accessories

700 TV Lines Analog Camera Vari Focal	Vandal-proof wall Mount	Pendant Mount	Wall Mount
HVA2CC51A7PVF	HVO1229ZJ	HVO1238ZJ	HVO1241ZJ

700 TV Lines Analog IR Camera Vari Focal

- 1/3" Sony CCD
- 2.8-12mm auto iris lens
- Vandal proof - IP66 rating
- 75dB wide dynamic range
- 3D DNR - Smart IR
- Digital wide dynamic range
- Electronic image stabilization

Accessories

700 TV Lines Analog IR Camera Vari Focal	Wall Mount	Tilted Wall Mount	Pendant Mount	Wall Mount
HVA2CC51A7PVPI	HVO1216ZJ	HVO1240ZJ	HVO1238ZJ	HVO1241ZJ

700 TV Lines Analog IR Camera Vari Focal

- 1/3" DIS
- 2.8-12mm auto iris lens
- IP66 rating
- True day / night

700 TV Lines Analog IR Camera Vari Focal
HVA2CE55A2PVFI

600 TV Lines Analog IR Camera

- 1/3" DIS
- 2.8-12mm auto iris lens
- Day/night auto switch
- IP66 rating

600 TV Lines Analog IR Camera
HVA2CE5582P

Analog Camera

600 TV Lines Analog IR Camera Vari Focal

- 1/3" Sony CCD
- 2.8-12mm auto iris lens
- Vandal proof
- IP66 rating
- True day / night
- Smart IR
- Digital wide dynamic range

600 TV Lines Analog Dome Camera
HVA2CC5281PAVP

560 - 650 TV Lines Analog IR Camera Vari Focal

- 1/3" Sony Super HAD CCD II
- 2.8 - 12 mm auto iris lens
- Vandal proof
- IP66 rating
- DNR
- Smart IR
- Digital wide dynamic range

560 TV Lines	650 TV Lines
HVA2CC5271PAIR	HVA2CC5181PVPI

700 TV Lines Analog Camera Vari Focal

- 1/3" Sony CCD
- 2.8-12mm auto iris lens
- Vandal proof
- IP66 rating
- Day / night auto switch
- Digital wide dynamic range

700 TV Lines Analog Camera Vari Focal
HVA2CC52A1PVP

Wall Mount
HVO1216ZJ

Pendant Mount
HVO1238ZJ

600 TV Lines Analog Camera

- 1/3" DIS
- 2.8-12mm auto iris lens
- Day/night auto switch
- IP66 rating

600 TV Lines Analog Camera
HVA2CE5582P

720 TV Lines Analog Camera Picadis Sensor

- 1/3" PICADIS - 1.3 Megapixel sensor
- Electronic day / night
- Compact design
- 3-axis adjustment

720 TV Lines Analog Camera Picadis Sensor
HVA2CE55C2P

720 TV Lines Analog Camera Picadis Sensor

- 1/3" PICADIS - 1.3 Megapixel sensor
- 720TVL high resolution
- EXIR 40m
- True day / night
- Smart IR
- IP66 rating

720 TV Lines Analog Camera Picadis Sensor
HVA2CE56C2PIT3

720 TV Lines Analog IR Camera Picadis Sensor

- 1/3" PICADIS - 1.3 Megapixel sensor
- True day / night
- Compact design
- Smart IR

720 TV Lines Analog IR Camera Picadis Sensor
HVA2CE55C2PIRP

Accessories

Vandal-proof wall Mount
HVO1258ZJ

Analog Bullet Camera

600 TV Lines Analog IR Camera Vari Focal

- 1/3" Sony CCD
- 2.8-12mm auto iris lens
- IP66 rating
- DNR
- Smart IR
- True day / night
- Digital Wide Dynamic Range

600 TV Lines Analog IR Camera Vari Focal
HVA2CC1281PAVF

600 TV Lines Analog IR Camera Vari Focal

- 1/3" SONY Super HAD CCD II
- 2.8-12mm auto iris lens
- IP66 rating
- DNR
- Smart IR
- True day / night
- Digital Wide Dynamic Range

600 TV Lines Analog IR Camera Vari Focal
HVA2CC1281PAVH

700 TV Lines Analog IR Camera Vari Focal

- 1/3" SONY CCD
- 2.8–12mm Vari-focal Lens
- True Day/Night
- OSD Menu, DNR, Smart IR, Eclipse
- IP66 Rating

700 TV Lines Analog IR Camera Vari Focal
HVA2CC11A5PVFI

700 TV Lines Analog IR Camera Vari Focal

- 1/3" SONY CCD
- 2.8–12mm Vari-focal Lens
- True Day/Night
- OSD Menu, DNR, Smart IR, Eclipse
- 75 dB Wide Dynamic Range
- IP66 Rating

700 TV Lines Analog IR Camera Vari Focal
HVA2CC11A7PVFI

700 TV Lines Analog IR Camera Vari Focal

- 1/3" Sony CCD
- 2.8–12mm Vari-focal Lens
- IP66 rating
- DNR
- Smart IR
- True day / night
- Digital Wide Dynamic Range

700 TV Lines Analog IR Camera Vari Focal
HVA2CC12A1PVF3

700 TV Lines Analog IR Camera Vari Focal

- 1/3" Sony CCD
- 2.8–12mm Vari-focal Lens
- IP66 rating
- DNR
- Smart IR
- Day / night auto switch
- Digital Wide Dynamic Range

700 TV Lines Analog IR Camera Vari Focal
HVA2CC12A1PVFI

600 TV Lines Analog IR Camera

- 1/3" DIS
- Smart IR
- IP66 rating
- True day / night

3,6 mm Lens	2,8 mm Lens
HVA2CE1582PIR	HVA2CE1582PIR2

600 TV Lines Analog IR Camera Vari Focal

- 1/3" DIS
- 2.8–12mm Vari-focal Lens
- IP66 rating
- True day / night

600 TV Lines Analog IR Camera Vari Focal
HVA2CE1582PVFI

720 TV Lines Analog IR Camera Picadis

- 1/3" PICADIS - 1.3 Megapixel sensor
- IP66 rating
- Smart IR

720 TV Lines Analog IR Camera Picadis
HVA2CE15C2PIR

720 TV Lines Analog IR EXIR Camera

- 1/3" PICADIS - 1.3 Megapixel sensor
- EXIR IR
- IP66 rating
- Smart IR

720 TV Lines Analog IR EXIR Camera
HVA2CE16C2PIT3

Digital Video Recorder - DVR

4/8/16 Channel DVR - HDMI/VGA Output

- H.264 video compression
- WD1 resolution recording in real time
- VGA output at 1920 × 1080P resolution
- Dual-stream
- 4/8/16-ch synchronous playback
- NTP,SMTP, NFS, UPnP™ and iSCSI protocols supported

Reference	Channel - Codecs
HVD7204HWISHA	4 Channel - H.264
HVD7208HWISHA	8 Channel - H.264
HVD7216HWISHA	16 Channel - H.264

4/8/16 Channel DVR - HDMI/VGA/CVBS Output

- H.264 video compression
- Up to WD1 resolution non-real-time recording
- VGA output at 1920 × 1080P resolution
- Dual-stream
- 8-ch synchronous playback
- NTP,SMTP, NFS, UPnP™ and iSCSI protocols supported

Reference	Channel - Codecs
HVD7204HVISHA	4 Channel - H.264
HVD7208HVISHA	8 Channel - H.264
HVD7216HVISHA	16 Channel - H.264

8/16 Channel DVR - HDMI/VGA Output

- H.264 video compression
- 4CIF resolution real time recording
- HDMI/VGA output at 1920×1080P resolution
- eSATA interface
- 4-ch synchronous playback
- SADP(IP Finder), SMTP, SNMP, FTP, NFS, NTP protocols

Reference	Channel - Codecs
HVD7308HFIST	8 Channel - H.264
HVD7316HWISHAV	16 Channel - H.264

8/16 Channel DVR - HDMI/VGA/CVBS Output

- H.264 video compression
- WD1 resolution real time recording
- HDMI/VGA output at 1920×1080P resolution
- Gigabit network interface
- 8-ch synchronous playback
- HDD quota and group management

Reference	Channel - Codecs
HVD7308HWISH	8 Channel - H.264
HVD7316HWISH	16 Channel - H.264

DVR & Analog Cameras Standard Installation

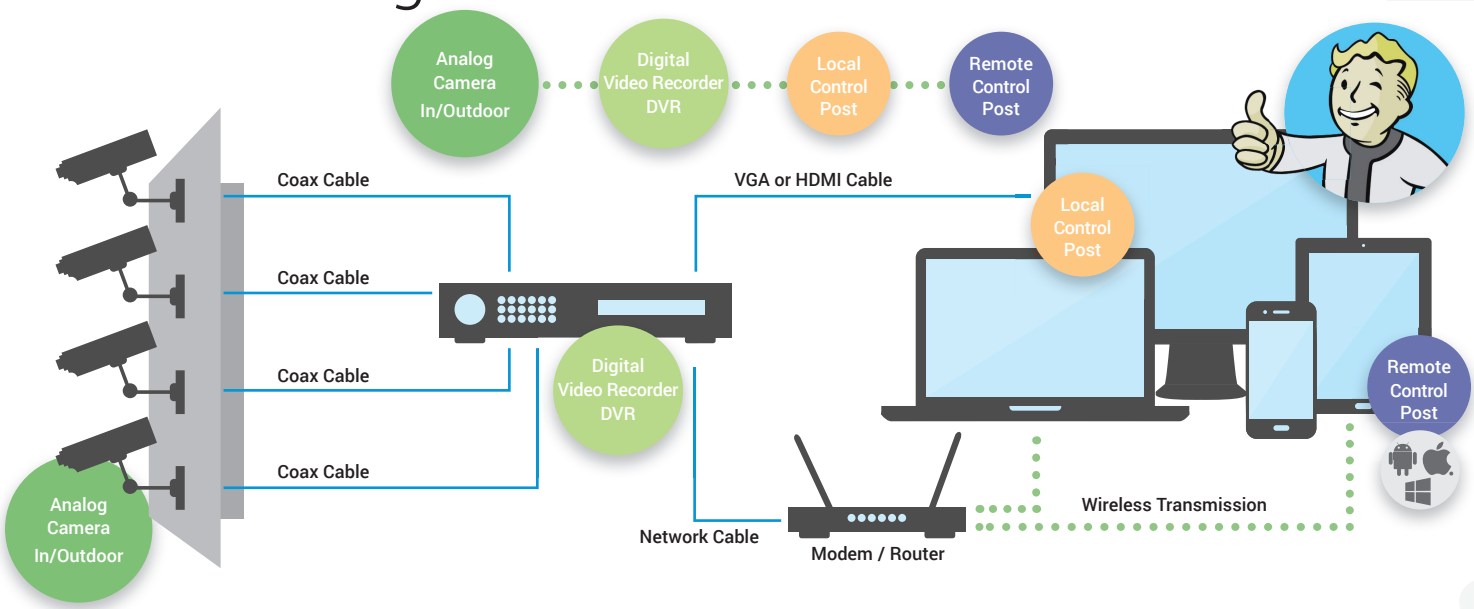

Storage / IR / Video / Sound Accessories

SATA Hard Disk

- Interface: S-ATA/600
- Enclosure Type: Internal
- Rotational Speed: 7200 RPM

Official CCTV Stickers

- Dutch and French language
- Neutral Pictogram stickers
- Weather Resistant
- Dimensions: 10 x 15 cm

500Gb	1Tb	2Tb	Official CCTV Stickers
CCTP045	CCTP050	CCTP055	CCTP080

LED LCD Display

- D-SUB/DVI/HDMI (27" Only)
- LED Technology
- 16:9 Widescreen
- DCR 50,000,000:1
- 16.7 Million Colors

18,5" D-SUB	21,5" D-SUB/DVI/HDMI	23,6" D-SUB/DVI	27" D-SUB/DVI/HDMI
CCTP060	CCTP061	CCTP065	CCTP070

Stand Alone LCD Monitor

- Adjustable image brightness/ color/contrast
- Adjustable bracket installation
- Switch able display mode by remote control
- Video signal disappear, display blue screen
- Card style remote control

Stand Alone LCD Monitor

- Headrest or bracket installation
- Switch display mode by remote control
- Video signal disappear, display blue screen
- Card style remote control
- Touch Control

7" - RCA Video Input	9" - HDMI Video Input	9" - RCA Video Input	9" - HDMI Video Input	10" - HDMI Video Input
CCTP075	CCTP085	CCTP105	CCTP115	CCTP110

High light IR Projector

- 2Pcs 42u Array IR LED
- IR Distance: 60/80m
- IR LED Angle: 60°
- Power DC12V 6W

High light IR Projector

- 14 Pcs Array IR LED
- IR Distance: 100/150m
- IR LED Angle: 60°
- Power DC12V 6W

High light IR Projector

- 114Pcs Array IR LED
- IR Distance: 120m
- IR LED Angle: 60°
- Power DC12V 6W

60m	80m	100m	150m	120m
CCT060	CCTA065	CCT070	CCTA075	CCT080

External Microphone for Camera

- 2x RCA input
- 60m2 Range

External Microphone for Camera

- 2x RCA input
- 60/100m2 Range
- Sensitive Adjusting and Noise reduce

External Microphone for Camera	$60m^2$	$100m^2$
CCTA045	CCTA050	CCTA075

Power Accessories

DVR / Camera Cable Set

- BNC & Power Cable Connection Kit
- BNC male + Power female to BNC male + Power male

5m	10m	20m	30m	50m
CCTA020	CCTA025	CCTA030	CCTA035	CCTA040

Power Splitter Cable

- Standard DC 2.1mm plug
- For up to 24 Volts

1 to 4	1 to 8
CCTP035	CCTP040

Camera Power Supply

- EU Plug Camera Power Supply
- Input Voltage: AC 110--240V
- Output Voltage: DC 12V

1500mA	3000mA	5000mA
CCTP001	CCTP010	CCTP015

Camera Weatherproof Power Supply

- Weatherproof Housing
- EU Plug Camera Power Supply
- Input Voltage: AC 110--240V
- Output Voltage: DC 12V

Camer Power Supply 2000mA
CCT065

DC to Terminal Block Male

- 2.1mm/5.5mm Straight

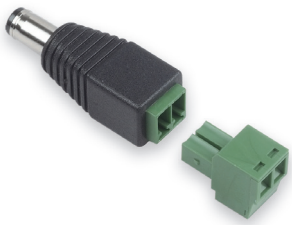

Male
TVIDAP008

DC to Terminal Block Female

- 2.1mm/5.5mm Straight

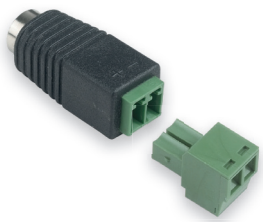

Female
TVIDAP008F

Twisted Pair Transmission Kit RJ45 Connection

- Transmit video and power over one Cat.5e networking cable
- Eliminate coaxial cable
- Fast, easy installation, saving time and money

Twisted Pair Transmission Kit RJ45 Connection
TVIDTTP111VPK

Twisted Pair Transmission RJ45 Connection

- Transmit video and power over one Cat.5e networking cable
- Eliminate coaxial cable
- Fast, easy installation, saving time and money

Twisted Pair Transmission RJ45 Connection
TVIDTTP111VLJ

Twisted Pair Transmission Kit Terminal

- Transmit video and power over one Cat.5e networking cable
- Eliminate coaxial cable. Fast, easy installation, saving time and money
- 6 pin terminal connector for easy connection

Twisted Pair Transmission Kit Terminal
TVIDTTP111VPKT

Twisted Pair Transmission Kit Terminal & Data

- Transmit video and power over one Cat.5e networking cable
- Eliminate coaxial cable. Fast, easy installation, saving time and money
- 6 pin terminal connector for easy connection
- With data - RS-232 or RS485

Twisted Pair Transmission Kit Terminal & data
TVIDTTP111VPDK

IP Dome Camera

1.3 Mp Dome IR Camera

- 1.3MP (1280 x 960) high resolution
- HD 720p real-time video
- Up to 30m IR visibility
- True day/night
- 3D DNR & DWDR & BLC
- Vandal-proof housing

Accessories

Dome IR Camera - 4mm Lens	Dome IR Camera - 2,8mm Lens	Wall Mount	Pendant Mount
HVICD2112I	HVICD2112I28	HVO1272ZJ110B	HVO1259ZJ

1.3 Mp Mini Dome IR Camera

- 1.3MP (1280 x 960) high resolution
- HD 720p real-time video
- DWDR & 3D DNR & BLC
- Onboard storage (up to 64 GB)
- IP66 protection
- Vandal-proof housing

Accessories

Dome IR Camera - 4mm Lens	Dome IR Camera - 2,8mm Lens	Wall Mount	Pendant Cap
HVICD2512FI	HVICD2512FI28	HVO1272ZJ120B	HVO1270ZJ120

1.3 Mp Dome IR Camera

- 1.3MP (1280 x 960) high resolution
- HD 720p real-time video
- EXIR 30m IR range
- True day/night
- 3D DNR & DWDR & BLC
- IP66 rating

Accessories

Dome IR Camera - 2.8mm Lens	Wall Mount
HVICD2332I	HVO1273ZJ130TR

1.3 Mp In/Outdoor Dome IR Camera Vari Focal

- 1.3MP (1280 x 960) high resolution
- 2.8-12mm vari-focal lens
- Up to 20m IR visibility
- True day/night
- 3D DNR & DWDR & BLC
- IP66 rating - Vandal-proof housing

Accessories

In/Outdoor Dome IR Camera Vari Focal	Wall Mount	Pendant Mount	Wire Intake Box
HVICD2712FI	HVO1256ZJ	HVO1238ZJ	HVO1280ZJ-DM20

1.3 Mp In/Outdoor Dome IR Camera Vari Focal

- Up to 2 mega-pixel (1600 x 1200) high resolution
- Full HD720p video output
- 2.8-9mm Motorized VF lens
- Vandal-proof housing
- IP66 rating
- 3-axis adjustment
- e-PTZ

In/Outdoor Dome IR Camera Vari Focal	Wall Mount	Pendant Mount	Wire Intake Box
HVICD7353FEI	HVO1256ZJ	HVO1238ZJ	HVO1280ZJ-DM20

3 Mp Dome IR Camera

- 3MP (2048 x 1536) high resolution
- Full HD 1080p real-time video
- Up to 30m IR visibility
- True day/night
- 3D DNR & DWDR & BLC
- Vandal-proof housing

Accessories

Dome IR Camera - 4mm Lens	Dome IR Camera - 2,8mm Lens	Wall Mount	Pendant Mount
HVICD2132I	HVICD2132I28	HVO1272ZJ110B	HVO1259ZJ

3 Mp Mini Dome IR Camera

- 3MP (2048 x 1536) high resolution
- HD 720p real-time video
- DWDR & 3D DNR & BLC
- Onboard storage (up to 64 GB)
- IP66 protection
- Vandal-proof housing

Accessories

Dome IR Camera - 4mm Lens	Dome IR Camera - 2,8mm Lens	Wall Mount	Pendant Cap
HVICD2532FI	HVICD2532FI28	HVO1272ZJ120B	HVO1270ZJ120

3 Mp Dome IR Camera

- 3MP (2048 x 1536) high resolution
- Full HD1080p real-time video
- EXIR 30m IR range
- True day/night
- 3D DNR & DWDR & BLC
- IP66 rating

Accessories

Dome IR Camera - 4mm Lens	Dome IR Camera - 2,8mm Lens	Wall Mount
HVICD2332I	HVICD2332I28	HVO1273ZJ130TR

3 Mp In/Outdoor Dome IR Camera Vari Focal

- 3MP (2048 x 1536) high resolution
- Full HD1080p real-time video
- 2.8-12mm vari-focal lens
- Up to 20m IR visibility
- True day/night
- 3D DNR & DWDR & BLC
- IP66 rating - Vandal-proof housing

Accessories

In/Outdoor Dome IR Camera Vari Focal	Wall Mount	Pendant Mount	Wire Intake Box
HVICD2732FI	HVO1256ZJ	HVO1238ZJ	HVO1280ZJ-DM20

IP Bullet Camera

1.3 Mp Bullet IR Camera

- 1.3MP (1280 x 960) high resolution
- HD 720p real-time video
- Low illumination
- 3D DNR & DWDR & BLC
- IP66 rating
- IR range: up to 30m
- True day / night

1.3 Mp Bullet IR Camera
HVICD2012I

3 Mp Bullet IR Camera

- 3MP (2048 x 1536) high resolution
- Full HD 1080p real-time video
- Low illumination
- 3D DNR & DWDR & BLC
- IP66 rating
- IR range: up to 30m
- True day / night

3 Mp Bullet IR Camera
HVICD2032I

1.3 Mp Bullet IR EXIR Camera

- 1.3MP (1280 x 960) resolution
- HD 720p real-time video
- DWDR & 3D DNR
- EXIR illuminators
- IP66
- PoE

1.3 Mp Bullet IR EXIR Camera
HVICD2212I

3 Mp Bullet IR EXIR Camera

- 3MP (2048 x 1536) high resolution
- Full HD 1080p real-time video
- DWDR & 3D DNR
- EXIR illuminators
- IP66
- PoE

3 Mp Bullet IR EXIR Camera
HVICD2232I

1.3 Mp Bullet IR Camera

- 1.3MP (1280 x 960) resolution
- HD 720p real-time video
- 2.8-12mm vari-focal lens
- 3D DNR & DWDR & BLC
- IP66 rating

1.3 Mp Bullet IR Camera
HVICD2612FI

3 Mp Bullet IR Camera

- 3MP (2048 x 1536) high resolution
- Full HD 1080p real-time video
- 2.8-12mm vari-focal lens
- 3D DNR & DWDR & BLC
- IP66 rating

3 Mp Bullet IR Camera
HVICD2632FI

3 Mp Bullet IR Camera Vari Focal - Defog

- 3MP (2048 x 1536) high resolution
- Full HD 1080p real-time video
- Smart Codec - Triple streams
- 120dB WDR, 3D DNR
- On-board storage, up to 64GB
- EIS (Electronic Image Stabilization)
- 2.8-12mm Motorized VF lens
- Smart VQD
- Smart Facial Detection
- Intrusion Detection
- Built-in heater
- Defog

3 Mp Bullet IR Camera Vari Focal - Defog
HVICD4232FWDIZ

1.3 Mp Bullet IR Camera Vari Focal - PSIA

- 1.3MP (1280 x 960) resolution
- HD 720p real-time video
- 2.8-9mm vari-focal lens
- IP66 rating

2 Mp Bullet IR Camera Vari Focal - PSIA
HVICD8253FEI

2 Mp Bullet IR Camera Vari Focal - PSIA

- 2MP (1600 x 1200) high resolution
- HD 720p real-time video
- 2.8-9mm vari-focal lens
- IP66 rating

2 Mp Bullet IR Camera Vari Focal - PSIA
HVICD8253FEI

Analog / IP PTZ Camera

Power over Ethernet

A pan–tilt–zoom camera (PTZ camera) is a camera that is capable of remote directional and zoom control.

In television production, PTZ controls are used with professional video cameras in television studios and referred to as camera robotics. These systems can be remotely controlled by automation systems. The PTZ controls are generally sold separately without the cameras.

PTZ is an abbreviation for pan, tilt and zoom and reflects the movement options of the camera. Other types of cameras are ePTZ or virtual pan-tilt-zoom (VPTZ) where a high-resolution camera digitally zooms and pans into portions of the image, with no physical camera movement. Ultra-low bandwidth surveillance streaming technologies, such as TVI from Digital Barriers, use VPTZ to stream user-defined areas in higher quality without increasing overall bandwidth usage. Surveillance cameras of this type are often connected to a digital video recorder which records the full field of view in full quality.

Auto Tracking

An innovation to the PTZ camera is a built-in firmware program that monitors the change of pixels generated by the video clip in the camera. When the pixels change due to movement within the cameras field of view, the camera can actually focus on the pixel variation and move the camera in an attempt to center the pixel fluctuation on the video chip.

This process results in the camera following movement. The program allows the camera to estimate the size of the object which is moving and distance of the movement from the camera.

With this estimate, the camera can adjust the cameras optical lens in and out in an attempt to stabilize the size of pixel fluctuation as a percentage of total viewing area. Once the movement exits the cameras field of view, the camera automatically returns to a pre-programmed or "parked" position until it senses pixel variation and the process starts over again.

700TV Lines HiWatch Analog PTZ Outdoor Camera 32x Zoom

- 1/3" Sony CCD
- 23x optical zoom
- 3D DNR, D WDR
- IP66 rating
- 3D intelligent positioning

Analog PTZ Outdoor Camera 32x Zoom
HVP2AE7164

2Mp HiWatch IP PTZ Outdoor Camera 30x Zoom

- 1/2.8" Progressive Scan CMOS, up to 1920x1080
- Smart Tracking, Smart Defog
- Smart IR, 150m IR distance
- 3D DNR, D WDR, HLC/BLC
- 30x Optical Zoom
- IP66 rating

HiWatch IP PTZ Outdoor Camera 30x Zoom
HVP2DF7286A

2Mp HiWatch IP PTZ Outdoor Camera 30x Zoom - PoE

- 1/3" Progressive Scan CMOS
- 30X optical zoom, 16X digital zoom
- Smart Tracking, Defog, ROI encoding, HLC
- Smart IR, 120m IR distance
- 3-Streams
- True Day/Night, 3D DNR, Digital WDR
- 3D intelligent positioning
- 24VAC / High-PoE power supply

IP PTZ Outdoor Camera 30x Zoom
HVP2DF7286AEL

PTZ Cameras Installation / Control

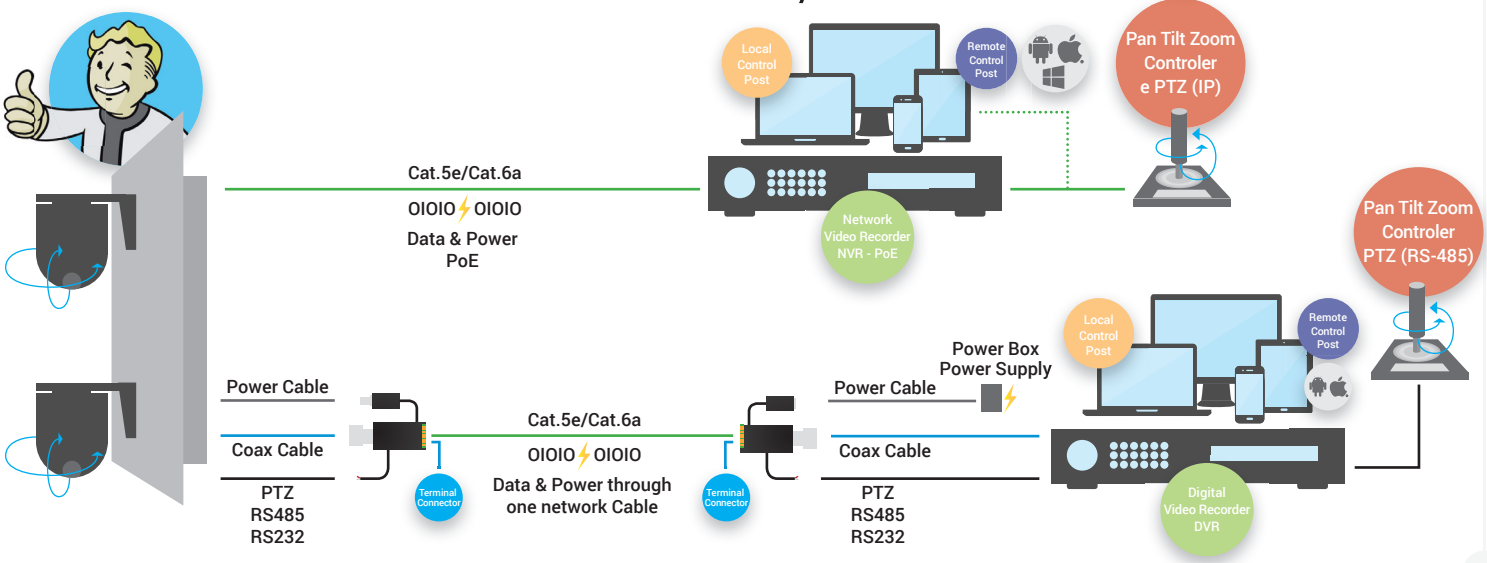

Network Video Recorder - NVR

4 Channel NVR - HDMI/VGA Output

- Third-party network cameras supported
- Up to 5 Megapixels resolution recording
- HDMI and VGA output at up to 1920×1080P resolution
- HDD quota and group management

Reference	Channel - Codecs - PoE - HDD
HVN7604NISE	4 Channel - H.264
HVN7604NISE1TB	4 Channel - H.264 - 1Tb HDD Included
HVN7604NISEP	4 Channel - H.264 - 4 port PoE

8 Channel NVR - HDMI/VGA Output

- Third-party network cameras supported
- Up to 5 Megapixels resolution recording
- HDMI and VGA output at up to 1920×1080P resolution
- HDD quota and group management

Reference	Channel - Codecs - PoE - HDD
HVN7608NISE	8 Channel - H.264
HVN7608NISE2TB	8 Channel - H.264 - 2Tb HDD Included
HVN7608NISEP8	8 Channel - H.264 - 8 port PoE

16 Channel NVR - HDMI/VGA Output

- H.264 video compression
- 5 Mp resolution real time recording
- HDMI/VGA output at 1920×1080P resolution
- eSATA interface
- 8-ch synchronous playback

Reference	Channel - Codecs - PoE - HDD
HVN7616NISEP	16 Channel - H.264 - 8 port PoE
HVN7616NIST	16 Channel - H.264

16/32 Channel NVR - HDMI/VGA Output

- Up to 16-32-ch IP cameras input
- Third-party network cameras supported
- Up to 5 Megapixels resolution recording
- HDMI and VGA output at up to 1920×1080P resolution
- HDD quota and group management
- 4 SATA, 2 USB 2.0

Reference	Channel - Codecs
HVN7716NIST	16 Channel - H.264 - eSATA
HVN7732NIST	32 Channel - H.264 - eSATA

4/8 Ch. Analog + 4/8 Ch. IP Hybrid DVR/NVR

- H.264 video compression
- 5 Mp resolution real time recording
- HDMI/VGA output at 1920×1080P resolution
- eSATA interface
- 4/8-ch synchronous playback

Reference	Channel - Codecs - PoE - HDD
HVNDS7604HISTA	4 Ch. Analog + 4 Ch. IP + Alarm
HVNDS7608HISTA	8 Ch. Analog + 8 Ch. IP + Alarm

16 Ch. Analog + 16 Ch. IP Hybrid DVR/NVR

- H.264 video compression
- 5 Mp resolution real time recording
- HDMI/VGA output at 1920×1080P resolution
- eSATA interface
- 8-ch synchronous playback

Reference	Channel
HVNDS7616HIST	16 Ch. Analog + 16 Ch. IP + Alarm

NVR & IP Cameras Standard Installation

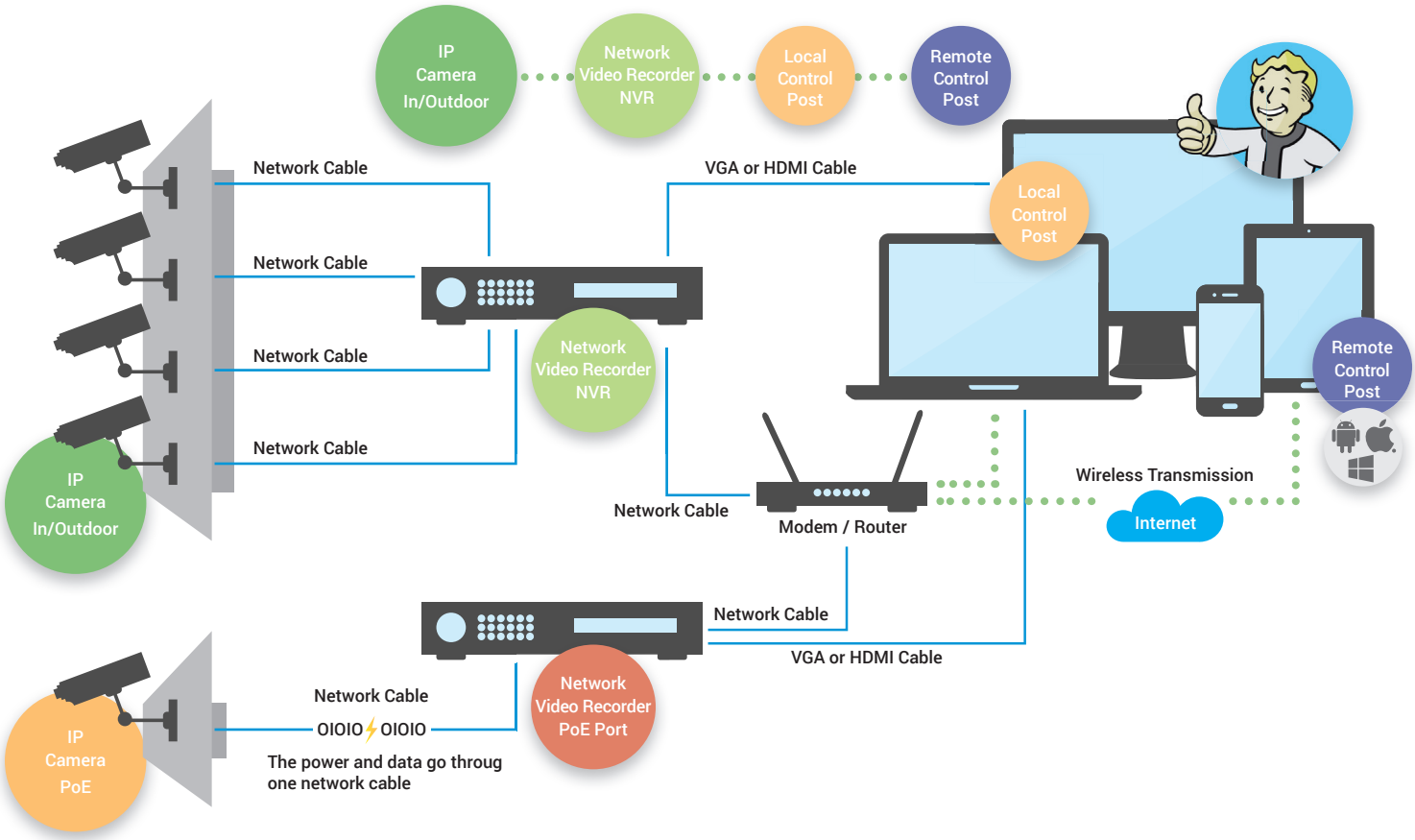

Power over Ethernet

Power over Ethernet or PoE describes a standardized system to pass electrical power along with data on Ethernet cabling. This allows a single cable to provide both data connection and electrical power to such devices as network hubs or closed-circuit TV cameras. Unlike standards such as Universal Serial Bus which also power devices over the data cables, PoE allows long cable lengths. Extra pairs of wire, not used for data transmission, are used for power. Up to 25 watts is available for a device, depending on the version of the standard in use.

Standard Development

The IEEE standard for PoE requires category 5 cable or higher for high power levels, but can operate with category 3 cable if less power is required. Power is supplied in common mode over two or more of the differential pairs of wires found in the Ethernet cables and comes from a power supply within a PoE-enabled networking device such as an Ethernet switch or can be injected into a cable run with a midspan power supply.

The original IEEE 802.3af-2003 PoE standard provides up to 15.4 W of DC power (minimum 44 V DC and 350 mA) to each device. Only 12.95 W is assured to be available at the powered device as some power is dissipated in the cable.

The updated IEEE 802.3at-2009 PoE standard also known as PoE+ or PoE plus, provides up to 25.5 W of power. The 2009 standard prohibits a powered device from using all four pairs for power. Some vendors have announced products that claim to be compatible with the 802.3at standard and offer up to 51 W of power over a single cable by utilizing all four pairs in the Category 5 cable.

Standard PoE Parameters and Comparison

Property	PoE Type1 IEEE 802.3af	PoE Type1 IEEE 802.3at
4 Ch. Analog + 4 Ch. IP + Alarm	12.95 W	25.50 W
8 Ch. Analog + 8 Ch. IP + Alarm	15.40 W	34.20 W
Voltage range at powered source	44.0 - 57.0 V	50.0 - 57.0V
Voltage range at powered device	37.0 - 57.0 V	42.5 - 57.0 V
Maximum current	350mA	600mA
Maximum cable resistance	20 ohms	12.5 ohms
Power mamagement	3 power class levels negotiated at initial connection	4 power levels negotiated at initial connection, or 0.1 W steps negotiated continuously
Derating of maximum cable ambient operating temperature	None	5°C with one mode (two pairs active)
Supported cabling	Cat.5	Cat.5
Supported modes	Mode A (endspan) Mode B (endspan)	Mode A, Mode B

PTZ Controler and CMS Software

Keyboard Controler for PTZ and DVR - RS485

- Control mode: RS-485 half-duplex mode Baud rate: 1200 ~19200bps
- Communication interface:1x RS-485 port
- Incorporate all DVR front panel functions
- Control DVR and PTZ separately
- Support DVR and keyboard cascading
- 3D joystick

Keyboard Controler for PTZ and DVR - RS485

HVO1003KI

Hik Vision IVMS-4200 Desktop and Mobile Software (Apps) for Windows (Mobile) / Android / Mac OSX and iOS

iVMS-4200 is a versatile video management software for the DVRs, NVRs, IP cameras, encoders decoders, etc. It provides multiple functionalities, including real-time live view, video recording, remote search and playback, file backup, etc., for the connected devices to meet the needs of monitoring task. With the flexible distributed structure and easy-to-use operations, the client software is widely applied to the surveillance projects of medium or small scale.

- Real-Time video preview of up to 4 channels
- Swipe for PTZ control and camera movement, pinch to zoom in and out in preview mode
- Support for preset activation and configuration, as well as calibration for brightness..
- Snapshot support
- Management of up to 256 devices. Devices profiles can be added / deleted/ modified

Hik Vision IVMS-4200 Desktop and Mobile Software (Apps)

IVMS-4200

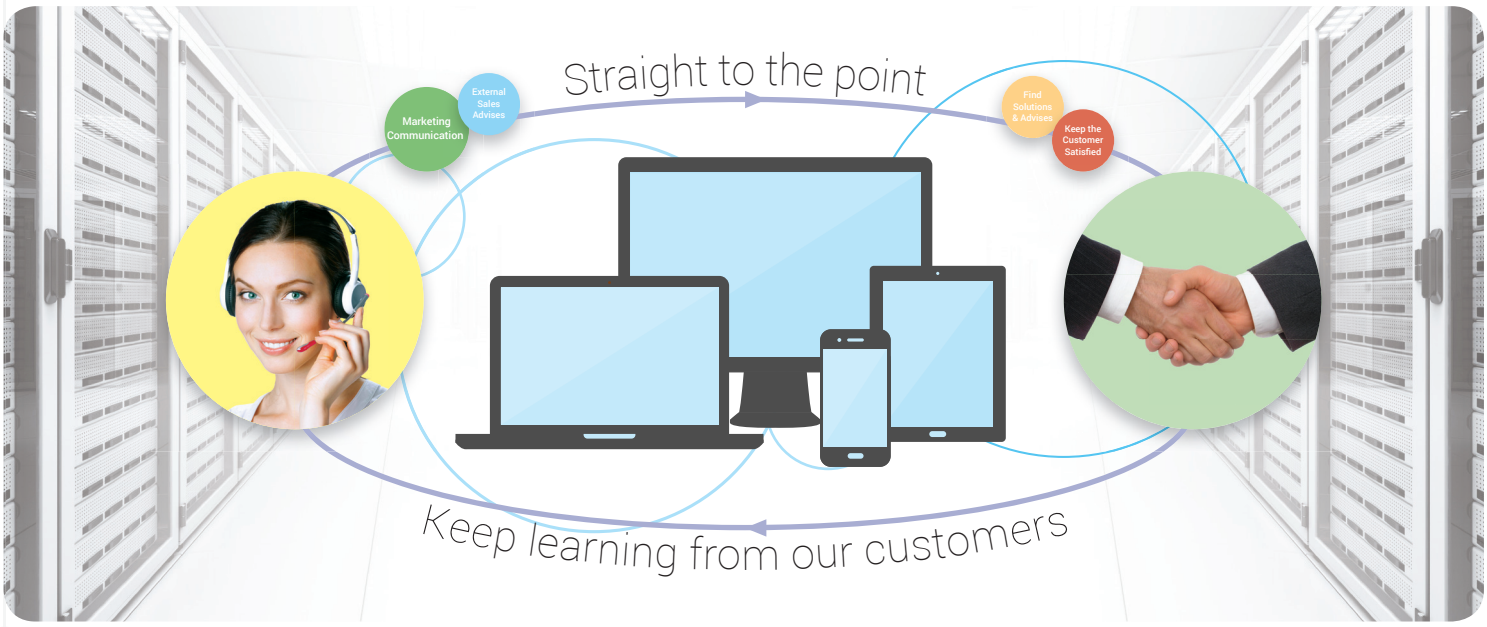

Table of Content

CCT005 4
CCT010 4
CCT020 4
CCT035 4
CCT040 4
CCT045 5
CCT050 5
CCT055 5
CCT060 5
CCT060 10
CCT065 5
CCT065 11
CCT070 5
CCT070 10
CCT080 10
CCT100 4
CCTA020 11
CCTA025 11
CCTA030 11
CCTA035 11
CCTA040 11
CCTA045 10
CCTA050 10
CCTA065 10
CCTA075 10
CCTA075 10
CCTP001 11
CCTP010 11
CCTP015 11
CCTP035 11
CCTP040 11
CCTP045 10
CCTP050 10
CCTP055 10
CCTP060 10
CCTP061 10
CCTP065 10
CCTP070 10
CCTP075 10
CCTP080 10
CCTP085 10
CCTP105 10
CCTP110 10
CCTP115 10
HVA2CC11A5PVFI 8
HVA2CC11A7PVFI 8
HVA2CC12A1PVF3 8
HVA2CC12A1PVFI 8
HVA2CC51A5PVPI 6
HVA2CC51A7PVF 6
HVA2CC51A7PVPI 6
HVA2CC52A1PVP 7
HVA2CC1281PAVF 8
HVA2CC1281PAVH 8
HVA2CC5181PVPI 6
HVA2CC5181PVPI 7
HVA2CC5271PAIR 7
HVA2CC5281PAVP 7
HVA2CE15C2PIR 8
HVA2CE16C2PIT3 8
HVA2CE55A2PVFI 6
HVA2CE55C2P 7
HVA2CE55C2PIRP 7
HVA2CE56C2PIT3 7
HVA2CE1582PIR 8
HVA2CE1582PIR2 8
HVA2CE1582PVFI 8
HVA2CE5582P 6
HVA2CE5582P 7
HVD7204HVISHA 9
HVD7204HWISHA 9
HVD7208HVISHA 9
HVD7208HWISHA 9
HVD7216HVISHA 9
HVD7216HWISHA 9
HVD7308HFIST 9
HVD7308HWISH 9
HVD7316HWISH 9
HVD7316HWISHAV 9
HVICD2012I 14
HVICD2032I 14
HVICD2112I 12
HVICD2112I28 12
HVICD2132I 13
HVICD2132I28 13
HVICD2212I 14
HVICD2232I 14
HVICD2332I 12
HVICD2332I 13
HVICD2332I28 13
HVICD2512FI 12
HVICD2512FI28 12
HVICD2532FI 13
HVICD2532FI28 13
HVICD2612FI 14
HVICD2632FI 14
HVICD2712FI 12
HVICD2732FI 13
HVICD4232FWDIZ 14
HVICD7353FEI 12
HVICD8253FEI 14
HVICD8253FEI 14
HVN7604NISE 16
HVN7604NISE1TB 16
HVN7604NISEP 16
HVN7608NISE 16
HVN7608NISE2TB 16
HVN7608NISEP8 16
HVN7616NISEP 16
HVN7616NIST 16
HVN7716NIST 16
HVN7732NIST 16
HVNDS7604HISTA 16
HVNDS7608HISTA 16
HVNDS7616HIST 16
HVO1003KI 18
HVO1216ZJ 6
HVO1216ZJ 6
HVO1216ZJ 6
HVO1216ZJ 7
HVO1229ZJ 6
HVO1238ZJ 6
HVO1238ZJ 6
HVO1238ZJ 6
HVO1238ZJ 6
HVO1238ZJ 7
HVO1238ZJ 12
HVO1238ZJ 12
HVO1238ZJ 13
HVO1240ZJ 6
HVO1240ZJ 6
HVO1240ZJ 6
HVO1241ZJ 6
HVO1241ZJ 6
HVO1241ZJ 6
HVO1241ZJ 6
HVO1256ZJ 12
HVO1256ZJ 12
HVO1256ZJ 13
HVO1258ZJ 7
HVO1259ZJ 12
HVO1259ZJ 13
HVO1270ZJ120 12
HVO1270ZJ120 13
HVO1272ZJ110B 12
HVO1272ZJ110B 13
HVO1272ZJ120B 12
HVO1272ZJ120B 13
HVO1273ZJ130TR 12
HVO1273ZJ130TR 13
HVO1280ZJ-DM20 12
HVO1280ZJ-DM20 12
HVO1280ZJ-DM20 13
HVP2AE7164 15
HVP2DF7286A 15
HVP2DF7286AEL 15
IVMS-4200 18
TVIDAP008 11
TVIDAP008F 11
TVIDTTP111VLJ 11
TVIDTTP111VPDK 11
TVIDTTP111VPK 11
TVIDTTP111VPKT 11